Counter Flashing

Part #	Description	Colors	Gauge/ Thickness	Piece Length	Pieces/ Box	Box/ Pallet	Pieces Pallet
GCF710ML	Galvanized 8″	Mill	26 ga/0.019	10′	10	25	250

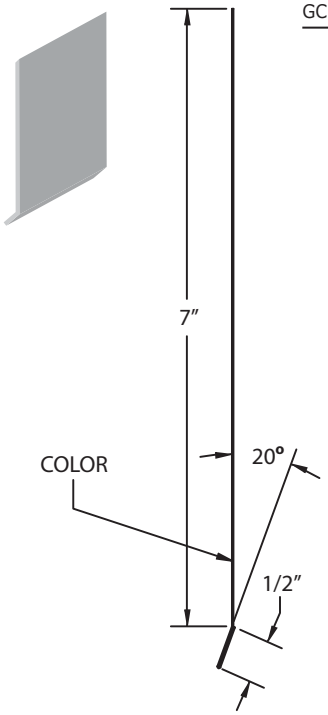

Drip Edge & Gutter Apron Colors:

COLOR	CODE	COLOR	CODE	COLOR	CODE	COLOR	CODE	COLOR	CODE
ALMOND	AL	CHARCOAL GREY	CG	HARBOR GREY	HG	REDWOOD	RW	TERRA BRONZE	TB
BLACK	BK	CLASSIC CREAM	CC	LINEN	LI	ROYAL BROWN	RB	VICTORIAN GREY	VG
BRONZE	BZ	DESERT SAND	DS	MUSKET BROWN	MB	SAGE	SA	VILLAGE GREEN	VI
BROOKSTONE	BS	EVEREST	EV	NORWEGIAN WOOD	NW	SANDSTONE	ST	WHITE	WH
CAMEO	CA	EVERGREEN	EG	PEBBLESTONE CLAY	PC	SILVER GREY	SG	WICKER	WI